Contacts	DIM A	DIM B
2	-----	1.27
4	1.27	2.54
6	2.54	3.81
8	3.81	5.08
10	5.08	6.35
12	6.35	7.62
14	7.62	8.89
16	8.89	10.16
18	10.16	11.43
20	11.43	12.70
22	12.70	13.97
24	13.97	15.24
26	15.24	16.51
28	16.51	17.78
30	17.78	19.05
32	19.05	20.32
34	20.32	21.59
36	21.59	22.86
38	22.86	24.13
40	24.13	25.40
42	25.40	26.67
44	26.67	27.94
46	27.94	29.21
48	29.21	30.48
50	30.48	31.75
52	31.75	33.02
54	33.02	34.29
56	34.29	35.56
58	35.56	36.83
60	36.83	38.10
62	38.10	39.37
64	39.37	40.64
66	40.64	41.91
68	41.91	43.18
70	43.18	44.45
72	44.45	45.72
74	45.72	46.99
76	46.99	48.26
78	48.26	49.53
80	49.53	50.80
82	50.08	52.07
84	52.07	53.34
86	53.34	54.61
88	54.61	55.88
90	55.88	57.15
92	57.15	58.42
94	58.42	59.69
96	59.69	60.96
98	60.96	62.23
100	62.23	63.50

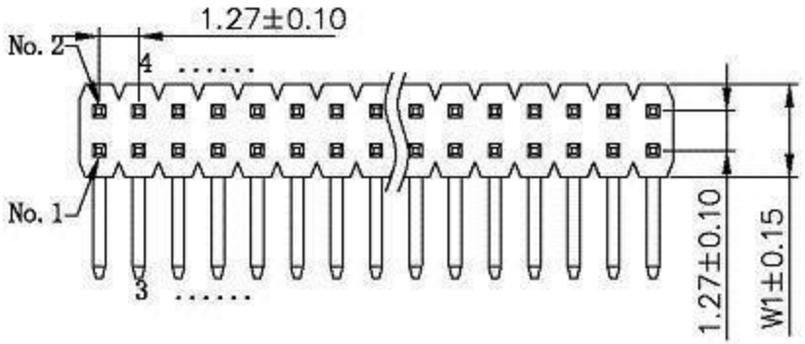

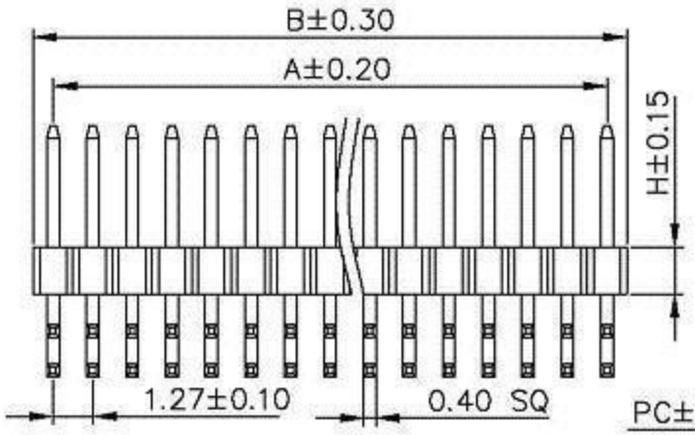

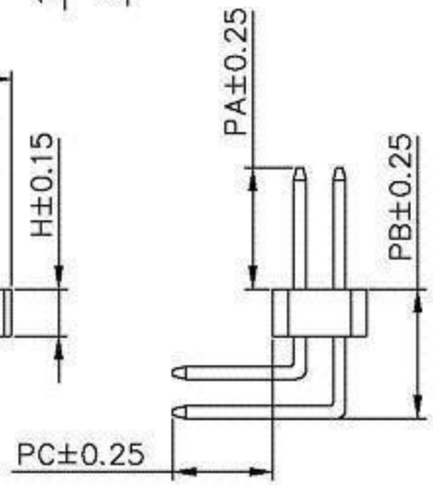

Notes.

1. Material
   Thermoplastic (PA6T)
   Contact : Brass (C2680)

2. Plating
   Contact: Plated 1u'' Au, 12u'' Ni Overall

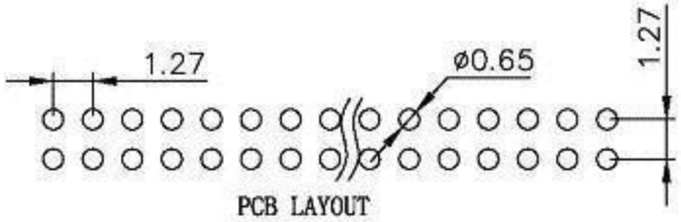

PCB LAYOUT

Dimension antitheses list (尺寸对照表)									
Item (项目)	A	B	L (短)	L (长)	PA	PC	PB	W1	H
客户要求尺寸	见左表	见左表	10.50	13.00	2.5	2.5	4.74	3.00	2.00

REV	ZONE	LTR	DESCRIPTION.	ECN.NO.	Date
E					
D					
C					
B					
A			RELEASED		03/15-13

Units mm Scale 5:1

Tolerance Unless Otherwise Specified
.X ~ ±0.30
.XX ~ ±0.25
.XXX ~ ±0.20
Angle ~ ± 3°

Drawing By wang zhi gang Date
Check By zeng chun ming Date
Approval By zeng chun ming Date

CTC Connection Technologies Corporation

Date 2013/03/15
Sheet 1 of 1
Title 9564-DR-26G
Thirt Angle Projection
Drawing No.
File Path Z/F:/ZLCPTD/PH
REV A